Argo 8x8 XTI

OPERATOR'S MANUAL

Do not remove this manual from this vehicle.

Safety!
...always in Season!

MANUAL NO. 671-22 Printed in Canada 10/2012

A MESSAGE FROM THE PEOPLE WHO BUILT YOUR ARGO

Thank you for selecting an **ARGO** amphibious, off-road utility vehicle!

Ontario Drive & Gear Limited has been building **ARGO** vehicles since 1967. By listening carefully to our customers and responding to their needs, we have been constantly improving the **ARGO** and will continue to do so.

Over thirty thousand **ARGO** vehicles have provided reliable service all over the world. From Britain to the Far East, Alaska to the Antarctic, and from the tropical forests of South America to the deserts of Saudi Arabia. We are proud to provide you with a vehicle that represents the ultimate in amphibious, all-terrain transportation.

Your safety and the safety of all **ARGO** users is of the greatest concern to us. You will find numerous safety statements in this manual. Please read and follow them carefully. Always be safety conscious when you operate your **ARGO** and remember it is a motorized vehicle.

The **ARGO** is easy to drive and you will soon be tempted to take on new challenges. Please take the time to develop your driving skills before doing so. Observe the recommendations outlined in this Operator's Manual and remember; some things are just impossible, even with an **ARGO**.

WELCOME TO THE WORLD WIDE ARGO FAMILY!

673-12 Argo XTI Service Manual
673-12CD Argo XTI Service Manual on CD-ROM

Ontario Drive & Gear has produced resources which provide the Argo owner with step-by-step instructions on how to perform general service procedures on vehicles produced since 1992. Everything from removal and replacement of brake pads to rebuilding the transmission. It's all there. Removal and replacement of engines is included, however, engine overhaul is not. A separate overhaul manual is available for the EFI engine from an authorized Kohler or Argo dealer.

NOTE

Read this manual ***before*** you operate your ARGO. It contains safe operating instructions and warns the user about potential hazards that can result in personal injury.

Warnings are identified in the text by the following symbol:

⚠ WARNING

Warning text warns the user about potential hazards that can result in personal injury or death.

Cautions are identified in the text by the following symbol:

⚠ CAUTION

Caution text contains cautions that can prevent damage to the vehicle.

This manual is based on the latest product information available at the time of printing. Ontario Drive & Gear Limited reserves the right to make changes at any time and without obligation.

Reproduction of any part of this publication is prohibited without prior written permission.

Une version francaise du manuel d'operation est disponible sous le numero suivant 671-22FR.

© 2012 Ontario Drive & Gear Limited

PREFACE

This manual describes the controls, operation and basic maintenance procedures for the XTI model of the ARGO from date of printing. Please take the time to read this manual carefully, for your safety and that of others. By following these instructions, you will ensure extended, trouble free operation of your vehicle.

For maintenance and adjustment of the engine, refer to the engine manufacturer's operation and maintenance manual included in your vehicle's information package.

Before you drive your ARGO, make sure you understand how to use all controls, particularly the brakes and steering system. Learn how to drive your vehicle in an open level area, away from buildings, trees and other obstacles, until you are completely familiar with its operating characteristics. Drive very slowly until your driving skills improve, and drive with caution and consideration at all times. The risk of accident or injury is greatest during the first few weeks of use. Take special care during this period. ALWAYS RESPECT OUR ENVIRONMENT.

CAUTION TO THE ARGO OWNER/OPERATOR

- Make sure everyone who drives this vehicle receives proper operating instructions and reads this Operator's Manual.
- No one under the age of 16 should be allowed to operate the ARGO. Children under the age of 16 may not have the skills, abilities or judgement needed to operate the ARGO safely and may be involved in an accident causing severe injury or death.
- Never allow anyone under the influence of alcohol or any other intoxicating substance to drive or ride in the vehicle.
- Wear an approved safety helmet and eye protection when driving or riding in the vehicle.
- Special operating and safety procedures described in this manual must be observed before and during water operation as outlined in Section 5.
- When operating your vehicle for extended periods of time, we recommend the use of approved hearing protection.
- Equip your vehicle with a fire extinguisher and a first aid kit.
- Equip your vehicle with basic tools for emergency repairs.
- Before starting your engine, check for spilled fuel and wipe any up immediately. Any fuel is a potentially explosive substance that can cause serious personal injury when ignited.
- Keep the floor pans secured in place at all times. Fingers, feet, animal tails or paws can be injured in the drive components beneath the floor pans. The floor pans also help keep damaging debris out of the drive components.
- Make sure all passengers remain seated while the vehicle is in motion. Advise your passengers to hold onto the vehicle at all times.
- Wear seatbelts when riding in a vehicle equipped with a ROPS.
- Never overload your vehicle. Trying to steer an overloaded vehicle can overheat the brakes. This will lead to brake fade which means loss of steering control and the ability to stop the vehicle. Overloading your vehicle can lead to premature brake system failures and costly damage to drive chains, axles or bearings. Follow the recommended load capacity for your vehicle listed in Section 1.
- Do not drive the vehicle at high speeds over unfamiliar or rough terrain. Personal injury or vehicle damage may result.
- Certain terrain and steep hills cannot be traversed safely with the ARGO or any other vehicle. Do not attempt to drive over terrain that is questionable.
- Use common sense at all times when driving your vehicle.
- The ARGO engine hood is designed to stay fastened in place while the vehicle is being driven. If the ARGO is transported by truck or trailer, the hood should be removed and carried in the transport vehicle or secured in place on the ARGO with rope or tie down straps. Wind or turbulence at road speeds could result in the loss of the hood.

IMPORTANT

Operate this vehicle with safety constantly in mind. Off-road vehicles face unpredictable and often hazardous terrain conditions. It is ultimately the operator's responsibility to handle the vehicle safely within its limitations and to decide when and where to travel.

TABLE OF CONTENTS

SECTION			PAGE
1.0	**GENERAL INFORMATION**		
	1.1	AMPHIBIOUS OPERATION	1
	1.2	MAINTENANCE PROCEDURES	1
	1.3	WIND CHILL FACTOR	1
	1.4	MODEL IDENTIFICATION	1
		1.4.1 Argo Vehicle Capacity	2
	1.5	IDENTIFICATION AND LOCATION OF CONTROLS	3
	1.6	INFORMATION LABELS	4
2.0	**GENERAL OPERATING INFORMATION**		
	2.1	NEW VEHICLE “BREAK-IN” PROCEDURE	5
	2.2	PRE-OPERATION CHECKS	5
	2.3	CARRYING PASSENGERS AND CARGO	5
	2.4	OPERATORS WITH DISABILITIES	5
	2.5	FUELLING THE VEHICLE	7
	2.6	VENTED FUEL SYSTEM - ALL MODELS	7
3.0	**OPERATING INSTRUCTIONS**		
	3.1	BRAKES AND STEERING	8
	3.2	STEERING POSITION ADJUSTMENT	8
	3.3	EMERGENCY/PARKING BRAKE SYSTEM	8
	3.4	THROTTLE CONTROL	9
	3.5	STARTING PROCEDURE	9
	3.6	NEUTRAL START SWITCH	9
	3.7	PRIMING PROCEDURE	9
	3.8	STOPPING THE ENGINE	9
	3.9	SELECTING AND CHANGING TRANSMISSION GEARS	10
		3.9.1 Changing Transmission Gears	10
	3.10	HEADLIGHTS	10
4.0	**DRIVING PROCEDURES**		
	4.1	DRIVING STRAIGHT AHEAD	11
	4.2	STOPPING THE VEHICLE	11
	4.3	TURNING THE VEHICLE	11
		4.3.1 Left Turn	11
		4.3.2 Right Turn	11
	4.4	BACKING THE VEHICLE UP	11
		4.4.1 Turning the Vehicle While Backing Up	11
	4.5	ADMIRAL Operating Advantage	12
		4.5.1 Selecting Forward, Neutral, Reverse, High or Low	12
		4.5.2 Recommended Gear Selections	12
5.0	**DRIVING PROCEDURES IN UNUSUAL CONDITIONS**		
	5.1	REMOTE AREA USE	13
	5.2	ANGLE OF OPERATION	13
	5.3	UPHILL OPERATION	13
	5.4	DOWNHILL OPERATION	13
	5.5	SIDE SLOPE OPERATION	13
	5.6	AMPHIBIOUS OPERATION - GENERAL	14

TABLE OF CONTENTS

SECTION **PAGE**

5.6.1 Entering Water 15
5.6.2 Driving Procedures in Water 15
5.6.3 Driving Out of Water 15

5.7 WINTER OPERATION 15
5.7.1 Use on Ice Covered Bodies of Water 16

6.0 OIL, FILTER AND LUBRICATION INFORMATION
6.1 ENGINE OIL INFORMATION 17
6.1.1 Checking the Engine Oil Level 17
6.1.2 Recommended Engine Oil 17
6.1.3 Changing Engine Oil 17
Draining the Engine Oil 17
Refilling the Engine 18

6.2 TRANSMISSION OIL INFORMATION 18
6.2.1 Checking the Transmission Oil Level 18
6.2.2 Changing the Transmission Oil 18
Refilling the Transmission 18

6.3 FILTER INFORMATION 18
6.3.1 Air Filter 18
6.3.2 Fuel Filter 19

6.4 LUBRICATION INFORMATION 19
6.4.1 General 19
6.4.2 Clutch Lubrication 19
6.4.3 Drive Chain Lubrication 19
6.4.4 Automatic Chain Oiler System (if equipped) 19
6.4.5 Axle Bearing Lubrication 20
6.4.6 Output Shaft Lubrication 20

7.0 MAINTENANCE INFORMATION
7.1 ELECTRICAL SYSTEM 21
7.1.1 GENERAL 21
7.1.2 BATTERY 21
Checking the Fluid Level 21
In-Vehicle Service and Testing 22
Safe Installation 22
Check the Charging System 22
Charging Tips 22
Battery Storage Tips 23
Jump Starting 23
Cleaning the Battery Terminals and Cable Connections 23
Cleaning the Battery 23
7.1.3 ELECTRICAL SYSTEM FUSES 23
7.1.4 SPARK PLUGS 23
7.1.5 SPARK ARRESTER 24
7.2 DRIVE SYSTEM & TIRES 24
7.2.1 DRIVE BELT 24

TABLE OF CONTENTS

SECTION **PAGE**

Drive Belt Adjustment 24
Drive Belt Removal 25
Drive Belt Installation 25
7.2.2 CLUTCH MAINTENANCE 25
Clutch Inspection 26
7.2.3 DRIVE CHAINS 26
Drive Chain Removal 26
Drive Chain Installation 26
7.2.4 SLIDER BLOCK REPLACEMENT 27
7.2.5 TIRE INFLATION 27
7.2.6 TIRE REPAIR AND REPLACEMENT 28

7.3 HYDRAULIC BRAKES 28
7.3.1 GENERAL 28
7.3.2 BRAKE FLUID LEVEL 28
7.3.3 CHANGING BRAKE FLUID 29
7.3.4 BRAKE PAD INSPECTION - Steering Brakes 29
Firewall Removal 29
Brake Pad Inspection Procedure 29
Re-installation of Brake Pads 29
Handbrake Inspection 30
Brake Pad Inspection Procedure 30
Re-installation of Firewall 30
7.3.5 EMERGENCY/PARKING BRAKE ADJUSTMENT 30
Adjusting the Emergency/Parking Brake 30
7.3.6 BRAKE PLUNGER ADJUSTMENT 31
7.3.7 ENGINE COOLING & EXHAUST SYSTEM 31

7.4 DAILY CHECKLIST 32

7.5 MAINTENANCE SCHEDULE 33

8.0 TROUBLESHOOTING 34

9.0 CLEANING AND STORAGE
9.1 CLEANING THE VEHICLE 36
9.2 STORING THE VEHICLE 36
Clean the Vehicle 36
Drain the Fuel System 36
Prepare the Battery for Storage 36
Protect the Electrical System 36
Raise the Vehicle 36
Preparing the Engine for Storage 36

10.0 POTENTIAL HAZARDS 37

11.0 ACCESSORY INFORMATION
11.1 GENERAL 41
11.2 REAR CARGO TIE-DOWNS (Part No. 849-116) 41
11.3 ARGO TRACK SYSTEMS (All Season Track Kit & Rubber Track Kit) 41
11.3.1 Track Installation 41

TABLE OF CONTENTS

SECTION **PAGE**

11.3.2 Operating Precautions 42
11.3.3 Installing the Axle Extensions 43
11.3.4 Operating Precautions (All Track Systems) 44
11.3.5 Rubber Tracks 45
Installation Instructions 45
11.3.6 Removal of Argo Rubber Track Systems 46
11.4 ICE CLEAT KIT (Part Nos. 825-20 & 825-21) 46
11.5 WINCH KIT (Part No. 622-133) 46
11.5.1 Rules for Safe Operation 46
11.5.2 Tips for Extending the Life of Your Winch 48
11.6 RECEIVER WINCH KIT 49
11.7 BILGE PUMP KIT (Part No. 849-146) 49
11.8 SNOW PLOW KIT (Part No. 657-106) 49
11.8.1 Operation Guidelines 49
11.9 UTILITY TRAILER (Part No. 695-80BL) 49
11.10.1 Operating Precautions 49
11.10 ROLL OVER PROTECTIVE STRUCTURES 50
11.11 FOUR POINT LIFT KIT (Part No. 848-121) 50
11.12 MUD FLAP EXTENDERS 50

APPENDIX

1 SPECIAL TOOLS
7R VICE GRIP MODIFICATION 51

SECTION 1
GENERAL INFORMATION

1.1 AMPHIBIOUS OPERATION

All models of the ARGO are amphibious and capable of traversing calm water. Special operating procedures and safety precautions must be observed before entering the water and during amphibious operation. Do not drive your vehicle into water until you have read Section 5.6 Amphibious Operation.

Operators with disabilities need to take certain precautions in the interest of their own safety. Refer to Section 2.4 of this manual for more details.

1.2 MAINTENANCE PROCEDURES

Maintenance procedures described in this manual can be carried out by the operator. These procedures include:

1. checking fluid levels
2. changing the engine and transmission oil
3. cleaning and replacing filters
4. preventative maintenance
5. inspections, adjustments, repairs and trouble-shooting

If you perform your own maintenance, carefully follow the lubrication and preventative maintenance schedule (Page 33). By following this schedule, you will receive trouble free, long term service from your vehicle. The following comprehensive ARGO service information is available:

- 673-12 XTI Service Manual

Your Argo dealer will perform regular maintenance and lubrication for a reasonable service charge.

The trouble-shooting chart (Section 8) contains information for locating and correcting mechanical problems. In many cases, potential problems can be identified by unusual noises, sluggishness or vibration, before they result in a breakdown. Refer to the chart to identify these symptoms. Take immediate corrective action or take the vehicle to an Argo dealer for service.

This manual does not provide detailed maintenance or servicing information for the engine. Refer to the engine manufacturer's manual (supplied with each Argo) for important warranty, service and operating information.

If the engine requires servicing, take the vehicle to an authorized engine service outlet.

1.3 WIND CHILL FACTOR

Why does it feel much colder outdoors on a windy day than when there's no wind, especially in winter?

The cooling effect of the wind makes it feel that it's colder than it really is. This combined effect of wind and low temperature is known as the "wind chill factor".

Argo operators should be aware of the wind chill factor. Dress warmly and make sure exposed skin is protected. Pay particular attention that young passengers are properly "bundled up" with their hands and faces well protected.

WIND CHILL

Wind Speed km/h	8	16	24	32	40	48	56	64	
Actual Temp.(C)									
0	-2	-8	-11	-14	-16	-17	-19	-19	Gradually Increasing Danger
-5	-7	-14	-18	-21	-23	-25	-26	-27	
-10	-12	-20	-25	-28	-31	-33	-34	-35	Dangerous
-15	-18	-26	-32	-35	-38	-40	-42	-43	
-20	-23	-32	-38	-43	-46	-48	-50	-51	
-25	-28	-38	-45	-50	-53	-56	-57	-59	Extremely Dangerous
-30	-33	-45	-52	-57	-61	-63	-65	-67	
-35	-39	-51	-59	-64	-68	-71	-73	-75	
-40	-44	-57	-65	-71	-75	-79	-81	-83	
-45	-49	-63	-72	-78	-83	-86	-89	-90	
-50	-54	-69	-79	-85	-90	-94	-96	-98	

1.4 MODEL IDENTIFICATION

Vehicles are identified by a 17 digit vehicle identification number located on the lower dash in front of the front left seat - see Section 1.6 for exact location. The model and serial numbers are stamped into it. The last 6 digits of this number begin with the letter K.

SECTION 1
GENERAL INFORMATION

Carefully observe the maximum load capacity for your vehicle on land and in water as listed in the following:

8x8 XTI

Engine:	Kohler 748 cc (31 h.p.) V-twin 4 cycle, liquid cooled
Transmission:	Forward, neutral and reverse with high/low range
Clutch:	Variable speed torque converter
Fuel Capacity:	36 Litre (9.5 U.S Gal.)
Steering/Brakes:	Hydraulic steering disc brakes with hydraulic disc stopping brakes
Drive Chains:	Single RS60-HT-1 Roller chains
Electrical:	12 volt D.C. battery, 775 cranking amps at 0 F; 40 Amp charging system, electronic ignition
Speed:	Land - 27 km/hr (17 mph) Water - 5 km/h (3 mph)
Load Capacity:	Land - 590kg (1300 lbs)
SEE SECT.1.4.1	Water - 4 adults or 454kg (1000 lbs)
Tires:	25x12.00-9NHS, 4 ply
Dry Weight:	725kg (1600 lbs)

1.4.1 Argo Vehicle Capacity

⚠ CAUTION

Vehicle capacity includes occupants, cargo, fuel, and all accessories. Capacity for occupants and cargo is reduced by the weight of accessories as shown in the following chart.

Available vehicle capacity must be reduced if your vehicle is equipped with any accessories. Reduce the available capacity by the total weight of accessories fitted to your vehicle.

	Reduce By			
Accessory	**On**		**On**	
On Vehicle	**Land**		**Water**	
18" Rubber Track 8x8	310 lbs.	(140 kg)	185 lbs.	(85 kg)
15" Multi-Purpose Track	310	(140)	500	(225)
Winch Kit	50	(23)	50	(23)
Brush Guard	15	(7)	15	(7)
Windshield	33	(15)	33	(15)
ROPS (2 person)	130	(60)	130	(60)
ROPS (4 person)	180	(80)	180	(80)
Snow Plow	190	(85)	**SEE WARNING**	
Dump Box	165	(75)	165	(75)
Suspension Seats	110	(50)	110	(50)
Rear Bench Seat	45	(20)	45	(20)
Hard Roof (2 person)	22	(10)	22	(10)
Hard Roof (4 person)	44	(20)	44	(20)
Mud Flaps (3/4 length)	22	(10)	22	(10)
Mud Flaps (full length)	75	(35)	75	(35)

⚠ WARNING

Do NOT use an Argo on water when equipped with a snow plow. The increased weight of the snow plow out front will make the Argo unstable and could cause the vehicle to capsize, causing injury or drowning to the driver and passengers.

SECTION 1
GENERAL INFORMATION

1.5 IDENTIFICATION AND LOCATION OF CONTROLS

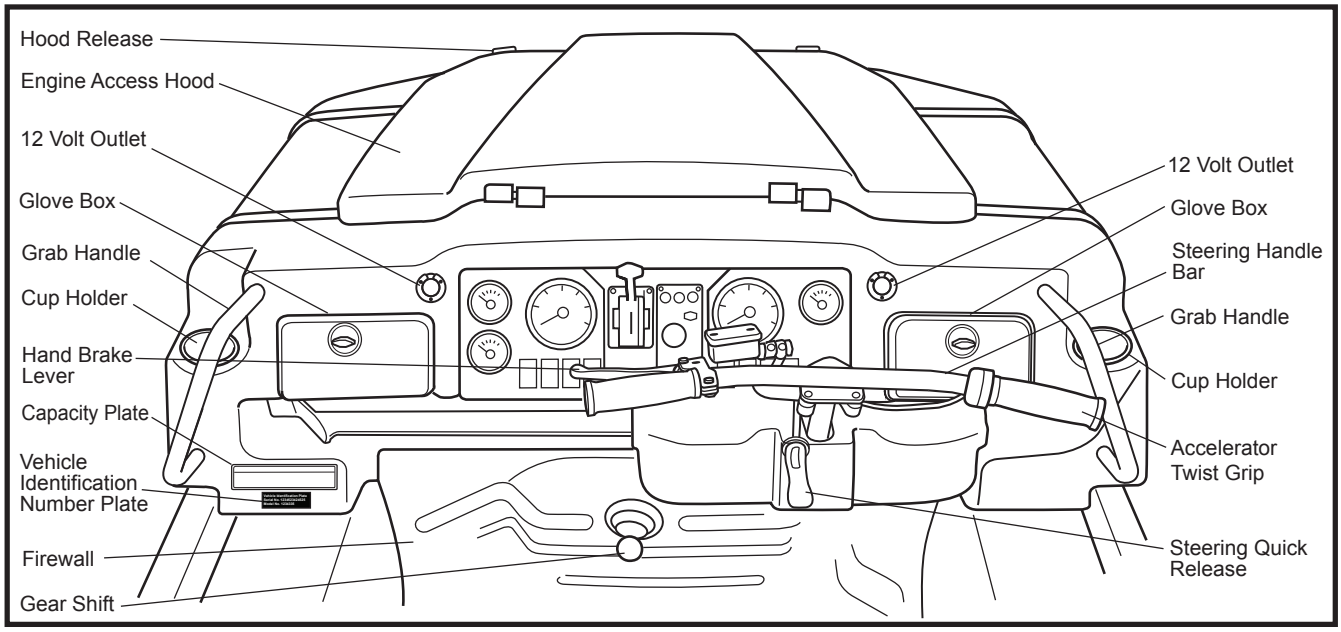

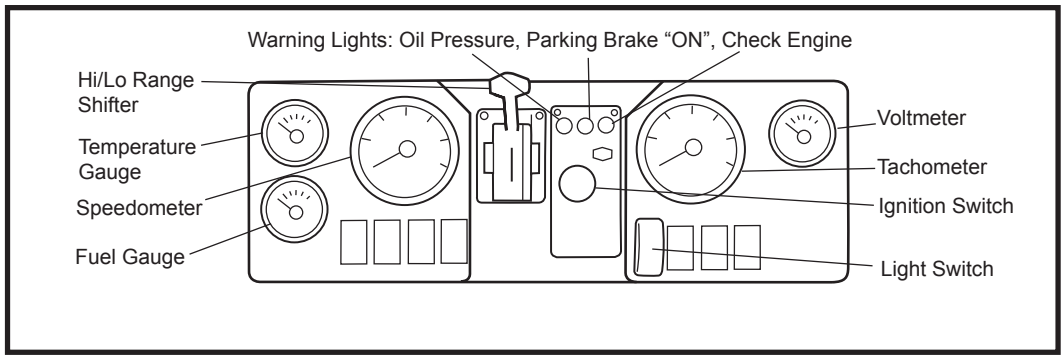

SECTION 1
GENERAL INFORMATION

1.6 INFORMATION LABELS

There are labels on all models which indicate operating hazards and provide special operating instructions. Information about the use of the holding brake system, the use of the vehicle in water, correct fueling procedures and placement of the floorpans has been provided on distinctive coloured labels fastened to the various locations on the Argo.

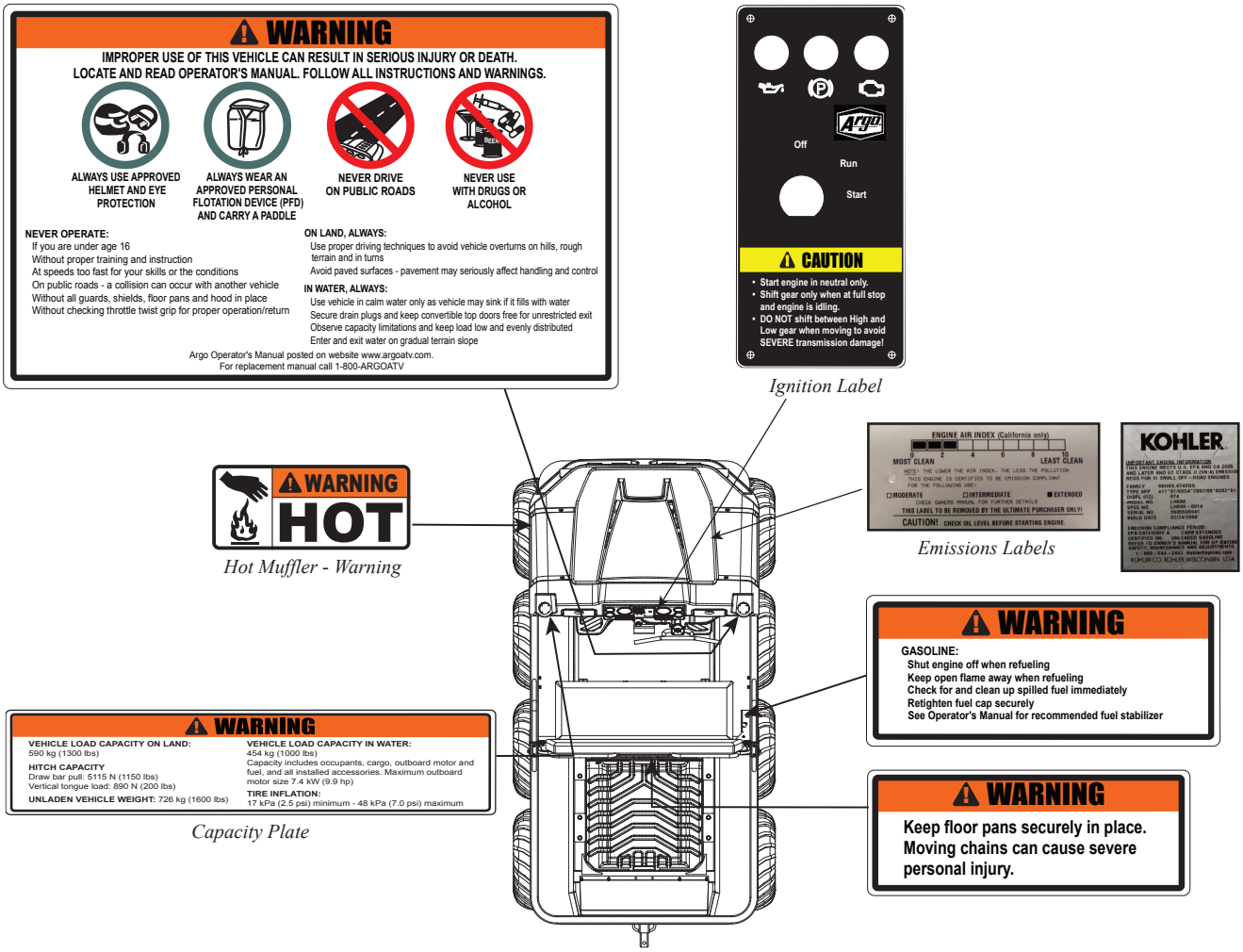

Figure 1-1 Location of Information Labels

SECTION 2
GENERAL OPERATING INFORMATION

2.1 NEW VEHICLE "BREAK-IN" PROCEDURE

To obtain long term, trouble free service from your vehicle, observe the following break-in guidelines:

1. Vary the speed of the vehicle for the first tank of fuel. Avoid full throttle operation during break-in period.

2. Check engine and transmission oil levels daily during break-in period.

3. Change the transmission oil after initial 20 hours of operation. Failure to do so can result in damage to the transmission bearings or gear surfaces. Refer to Section 6.2.1 and 6.2.2 for transmission oil changing instructions.

4. Change the engine oil in the engine after the first 20 hours of operation. Refer to Section 6.1.3 of this manual and the oil change section of each engine owner's manual for oil change information.

5. Never overload your vehicle. Trying to steer an overloaded vehicle can overheat the brakes. This will lead to brake fade which means loss of steering control and the ability to stop the vehicle. Overloading the vehicle can lead to premature brake system failures and costly damage to drive chains, axles or bearings. Follow the recommended load capacity for the vehicle listed in Section 1.4.

6. Do not allow the brakes to drag, particularly during the first 10 hours of operation. To maximize brake pad life, start by making several low speed turns to both sides. Allow the brakes to cool by driving in a straight line. Repeat the low speed turns. Allow the brakes to cool again. This procedure will properly seat the brake pad friction material to the brake disc. The handlebar should be kept centered during straight ahead operation. Dragging the brakes will cause overheating of the brake components and result in brake fade.

2.2 PRE-OPERATION CHECKS

Carefully follow the engine manufacturer's recommended pre-operation/daily checks as well as the following:

1. Check the fuel level on the gauge.

2. Check the air pressure in all tires. All tires should be the same pressure. For light use with low payloads pressurize to 5 psi (24 kPa). For heavy use with high loads use up to 7 psi (48 kPa.)

3. Test the operation of the twist grip throttle control by turning it to the fully open position and releasing it. The throttle must operate smoothly and return automatically to the fully closed position. Take the vehicle to an ARGO dealer if the twist grip requires adjustment.

4. Check hand operated brake lever on left hand steering bar for braking capability. Check steering handle bar travel to the left and to the right for steering capability. See Section 7.3.6 for Plunger Pin Adjustment.

5. Check the engine intake and exhaust screen for obstructions. Clear any debris that has accumulated.

2.3 CARRYING PASSENGERS AND CARGO

1. Keep cargo as low as possible and evenly distributed.

2. Use extreme CAUTION when negotiating inclines with a loaded vehicle. Heavy loads and high loads decrease the stability of the vehicle and may cause it to roll. Be prepared to shift occupant weight and load forward or have passengers get out of the vehicle to climb an incline.

3. Secure cargo to prevent it from shifting while driving.

⚠ WARNING

Make sure all passengers riding in an ARGO equipped with tracks and ice cleats are informed to keep hands, feet and clothing inside the vehicle, well away from the tracks and ice cleats, while the ARGO is in motion. Serious injury or death could result from getting caught by the ice cleats.

2.4 OPERATORS WITH DISABILITIES

⚠ WARNING

The information below pertains to safety procedures, which, if not followed, can result in personal injury or death or damage to the Argo vehicle.

We advise persons with disabilities who operate Argo vehicles, to take certain precautions in the interest of their own safety. Since the nature of disabilities can vary widely, it is impossible to give complete instructions that apply to every specific case. Therefore, it is the responsibility of the Argo driver to take steps beyond the ones suggested in the following that take the special nature of his/her disability into account in order to operate the vehicle safely.

Please read this Operator's Manual thoroughly BEFORE OPERATING YOUR NEW ARGO VEHICLE.

SECTION 2
GENERAL OPERATING INFORMATION

Equipment

For mobility-impaired drivers, the following additional equipment should be installed in the Argo vehicle:

- roll-over protection
- a special seat assisting the driver in maintaining his/her seating position
- four-point safety harness
- fire extinguisher within reach of the driver

Maximum Payload

Due to the additionally installed equipment, including any other ARGO accessories, the maximum available payload of the vehicle must be reduced accordingly; refer to Section 1 in your ARGO Operator's Manual under Argo Vehicle Capacity. Never exceed the maximum load capacity of the vehicle.

General

Ensure that the on-board fire extinguisher is fully charged at all times and have it inspected on a regular basis by qualified personnel.
We recommend that you do not venture out in your Argo without being accompanied by an able-bodied person to assist you in case you encounter difficulty. If this is not possible, make sure that adequate communications equipment (eg. cell phone, two-way radio) with an independent power supply is on-board and communication lines are open at all times to call for help if necessary. Remember, a simple technical failure could leave you stranded.

If parts of your body are pain insensitive, please take extra care to ensure that your skin does not touch components of the Argo that may be hot. Also, be aware of hot air exhaust outlets and moving parts.

If your vehicle is equipped with an optional wheelchair swing-arm lift, make sure that the lift line and the swing arm are secured. An unsecured lift arm or line could injure bystanders or property and can also result in loss of control over the vehicle if it gets caught while driving.

If your vehicle is equipped with a transfer board, ensure that the board is removed from the body support bracket when not in use and safely stored in a spot convenient to reach.

Water Operation

Carefully read Section 5 of the Operator's Manual covering water operation.

Enter the water from a firm gradual slope. If the water is deep enough for the vehicle to float, unlatch all safety belts and restraining devices, including the operator's. In shallow water be prepared to free yourself from restraining devices quickly. If an emergency arises, you and your passengers may have to leave the vehicle quickly.

If the vehicle is equipped with an optional ROPS (2 or 4 person), hard top and fabric sides, roll the sides up to allow for a quick exit in case the vehicle submerges and to reduce the surface exposed to the wind.

Be aware that the weight of the ROPS makes the vehicle more likely to rollover in water than an un-accessorized vehicle.

We do not recommend the use of your Argo on frozen water surfaces because of the danger of breaking through the ice and the risk of exposure in cold water. (Refer to Section 5 of the Operator's Manual.) If you must cross ice-covered bodies of water, take along an able-bodied person to assist if difficulties are encountered.

Land Operation

When your vehicle is equipped with a ROPS and operating on land, make sure all occupants including yourself are wearing the seat belts and you are strapped in your seat firmly at all times. Loss of seating position could result in loss of control of the vehicle.

Be constantly aware of the overall height and width of your Argo vehicle equipped with the ROPS. Watch out for low objects, eg. brush, branches, etc. which could strike the ROPS and cause the vehicle to stop abruptly, rollover, or go out of control.

Due to the weight of the ROPS, your vehicle is more likely to rollover on land than a standard Argo vehicle. Ensure passengers and operator remain seated at all times and keep all cargo low and evenly distributed.

Seat belts must be properly adjusted and worn by all occupants at all times EXCEPT when the vehicle is floating in water.

We have provided this information because we want you to enjoy your mobility in the outdoors safely. However, please keep in mind that all the warnings and instructions in the world cannot replace common sense. You've got it – please use it.

SECTION 2
GENERAL OPERATING INFORMATION

2.5 FUELING THE VEHICLE

⚠ WARNING

Gasoline is extremely flammable and can explode under certain conditions. Do not add fuel while the engine is running or hot. If fuel is spilled in, on or around the vehicle, wipe it up immediately. Flush out any fuel spilled in the vehicle with water and allow it to drain out through the drain plug holes. Do not smoke when filling the fuel tank.

Use clean, fresh, unleaded gasoline in your ARGO. Minimum 87 octane fuel is recommended.

Leaded gasoline can be used as a substitute fuel. However, if leaded gasoline is used, the engine will require more frequent servicing.

Never use gasoline containing methanol or white gas since engine or fuel system damage could occur.

The Argo is equipped with a 36 litre (9.5 U.S. Gal.) polyethelene fuel tank located under the driver's seat. Depending on loading and driving conditions, an ARGO can be driven for 7 to 12 hours on one tank of fuel. Verify your vehicle's actual fuel consumption *before* attempting any long trips. Never travel in remote areas or set out on long trips *without* a full tank of fuel and adequate spare fuel stored in approved watertight fuel containers.

The fuel filler neck and fuel cap are located on the right side of the vehicle behind the driver's seat. Replace the fuel cap if fuel leakage occurs, or if moisture is detected in the fuel. Use ARGO Part No. 126-100 fuel cap.

Never fill the tank to the point where the fuel level rises into the filler neck. If the tank is overfilled, heat may cause the fuel to expand and overflow through the vent.

Portable fuel containers may contain contaminants (dirt, water, etc.) that will cause engine operating problems. Use only clean, approved gasoline containers.

After filling the fuel tank, be sure the fuel cap is replaced securely. Do not drive the vehicle unless the fuel cap is properly in place.

⚠ CAUTION

Never use untreated gasoline that has been stored for more than 45 days. *Stale gasoline can cause deposits to form in the fuel lines and fuel system. These deposits clog the fuel system and cause engine starting and operating problems.*

When storing the ARGO for 45 days or more, use ARGO Part No. 127-77 Fuel Stabilizer to treat fuel in the fuel tank and fuel containers.

2.6 VENTED FUEL SYSTEM

The XTI has a fuel system that is vented through a special hose connected to the filler neck assembly that runs along the frame to a fitting at the engine.

SECTION 3
OPERATING INSTRUCTIONS

3.1 BRAKES AND STEERING

⚠ CAUTION

Do NOT oversteer. Avoid the tendency to push or pull harder on the steering system if the vehicle is not responding as expected. Once the steering brakes have been locked, pushing or pulling harder on the steering system will not increase the turning capacity of the vehicle. Damage may occur to the steering system as a result of oversteering.

The moto-cross style steering handle bar is used to turn the vehicle when it is moving in forward or reverse. Pulling back on the right side of the steering handle bar while pushing on the left side of the handle bar, causes the vehicle to turn right. Pulling back on the left side of the steering handle bar while pushing on the right side causes the vehicle to turn left. (Figure 3-1). To stop the vehicle, pull back on the hand brake lever located on the left handle bar.

The ARGO is a skid steer vehicle. During a turn, the rear of the vehicle swings outward as the vehicle pivots on the front tire on the inside of the turn. To make a right hand turn, the rear of the vehicle skids out to the left. To make a left hand turn, the rear of the vehicle skids out to the right.

⚠ WARNING

When turning, the back of the vehicle swings to the opposite direction of the turn. Always take care to avoid hitting persons or objects with the rear of the vehicle! Serious injury or death can result!

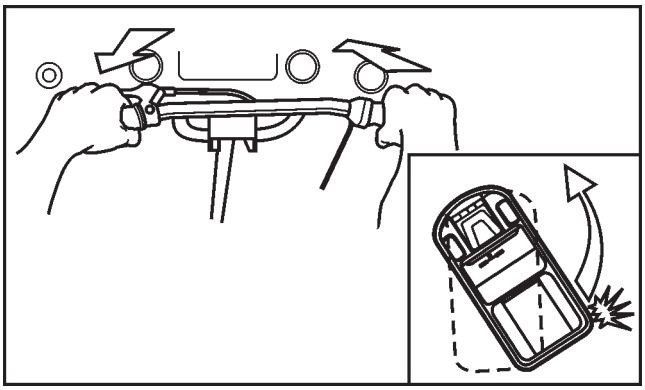

Figure 3-1. Making a left hand turn.

3.2 STEERING POSITION ADJUSTMENT

The Argo XTI is equipped with adjustable position steering controls. To relocate the handle bar assembly to a different position, lift UP on the steering quick release lever, away from the control cover. (Figure 3-2). Once loose, slide the whole assembly left or right to a new position and secure by pushing the quick release down and against the cover.

Figure 3-2. Steering position adjustment.

If it is still not secure, cam adjustment may be required. This is done by adjusting the slotted screw at the cam end of the clamp lever (Figure 3-3).

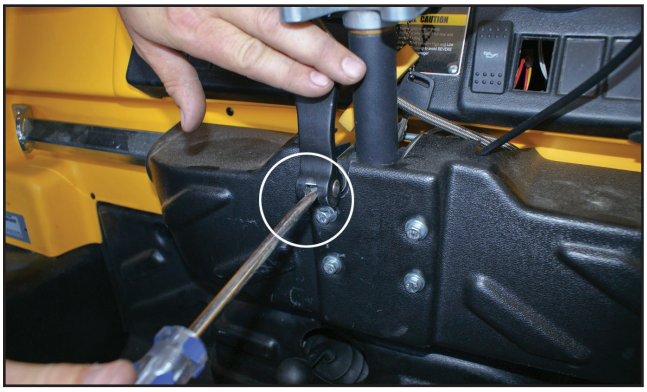

Figure 3-3. Adjustment on cam lever.

After each change to the steering position, left, right or center, you should inspect the steering and throttle brake lines for proper routing behind the control cover and inside the engine compartment. Failure to do so may cause the brake lines to pinch, causing fluid restriction, damage to the brake lines or interference with master cylinder / plunger operation.

3.3 EMERGENCY/PARKING BRAKE SYSTEM

When in use, the emergency/parking brake system keeps the wheels locked in the full braking position.

To apply the emergency/parking brake system:

1. Pull the hand brake lever up firmly so the ratchet mechanism engages.

SECTION 3
OPERATING INSTRUCTIONS

To release the emergency/parking system:

1. Pull up on the hand brake lever and press the button on the end to release the ratchet mechanism.

3.4 THROTTLE CONTROL

Vehicle speed is controlled by the throttle twist grip. To increase vehicle speed, turn the twist grip as shown in Figure 3-4. To decrease vehicle speed, release the twist grip so the engine returns to idle.

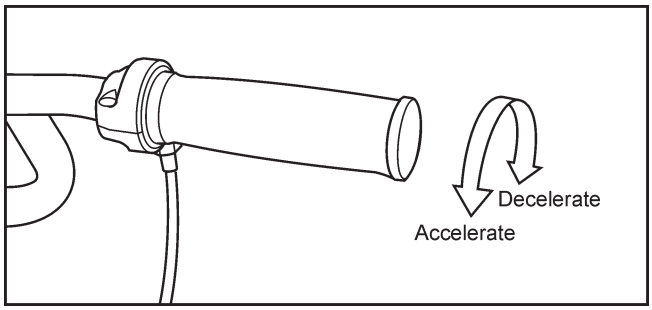

Figure 3-4. Operation of the throttle twist grip

3.5 STARTING PROCEDURE

⚠ WARNING

Never start or run the engine in a closed building or confined area. Engine exhaust gases contain poisonous carbon monoxide. Carbon monoxide is odourless, colourless and can cause serious personal injury or death.

The ARGO is equipped with a key operated, electric start system. To start the vehicle, proceed as follows:

1. Place the gearshift in the neutral (N) position.
2. Apply the emergency/parking brake system.
3. Open the accelerator twist grip control 1/8 turn.
4. Turn the key to the “START” position. (See Figure 3-5).

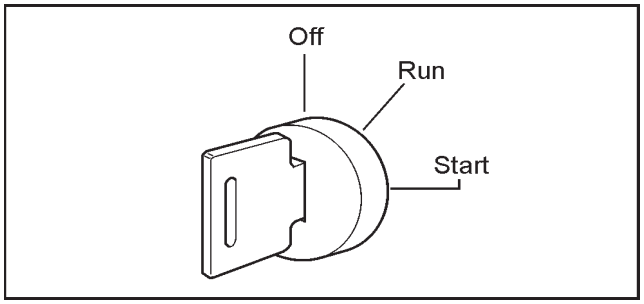

Figure 3-5. Ignition Switch.

⚠ CAUTION

Do not operate the starter continuously for more than 5 seconds or the starter may overheat. Wait 30 seconds between each operation of the starter to let it cool and the battery power to recover. Never attempt to restart the engine until the engine completely stops. Always remove key from switch when leaving vehicle unattended or when vehicle is not in use.

5. Release the key as soon as the engine starts: the key will automatically return to the “RUN” position.
6. Release the twist grip control and allow the engine to come to an idle.
7. Release the parking brake only when you are ready to drive the vehicle.
8. If the engine fails to start, refer to the troubleshooting chart in Section 8 for corrective action.

3.6 NEUTRAL START SWITCH

If the vehicle will not start in neutral, the battery has a charge, and the electrical connections to the neutral start are all ok, find the two green wires labelled "override" and unplug them from the wire harness. (Open the hood and locate them below the fuse block.) Connect the 2 wires that are labelled "override" together. This bypasses the neutral start switch on the transmission. Have the problem corrected by your Argo dealer ASAP. Connect these two wires together and start the unit. **Make sure that the neutral start device is repaired and reconnected at the earliest convenienc.**

3.7 PRIMING PROCEDURE

If the vehicle has run out of fuel, follow the procedure below to prime the fuel system to restart.

1. Turn the key switch to the "ON" position for one minute. Allow the fuel pump to cycle and prime the system. Turn the key switch "OFF".
2. Turn the key switch to the "START" position, crank and start engine.
3. If the engine fails to start, repeat steps 1 and 2. If the engine does not start after two priming intervals, contact your Kohler Engine Service Dealer for further assistance.

3.8 STOPPING THE ENGINE

Release the throttle twist grip. Let the engine speed return to idle and turn ignition switch to the “OFF” position. Always remove key from ignition switch when leaving the vehicle unattended.

SECTION 3
OPERATING INSTRUCTIONS

3.9 SELECTING AND CHANGING TRANSMISSION GEARS

DO NOT CHANGE TRANSMISSION GEARS WHILE THE VEHICLE IS MOVING. To change gears, bring the vehicle to a complete stop, let the engine idle down completely, engage hand brake and move the shift lever to the selected gear.

3.9.1 Changing Transmission Gears

The ARGO XTI is equipped with two shift levers. One gearshift lever extends through the firewall and moves left and right. Forward gear is located to the left of neutral and reverse gear to the right of neutral. (See Figure 3-6.) PLEASE OBSERVE CAUTIONS. There is a second shift lever located on the dash. High range is selected when the lever is in the up position and should be used for most driving conditions. Low range is selected when the lever is in the down position. (See Figure 3-7.)

⚠ CAUTION

Do not shift from HI to LOW, Forward or Reverse or vice versa while vehicle is in motion. Ensure vehicle is at a complete stop before placing the lever into the desired range.

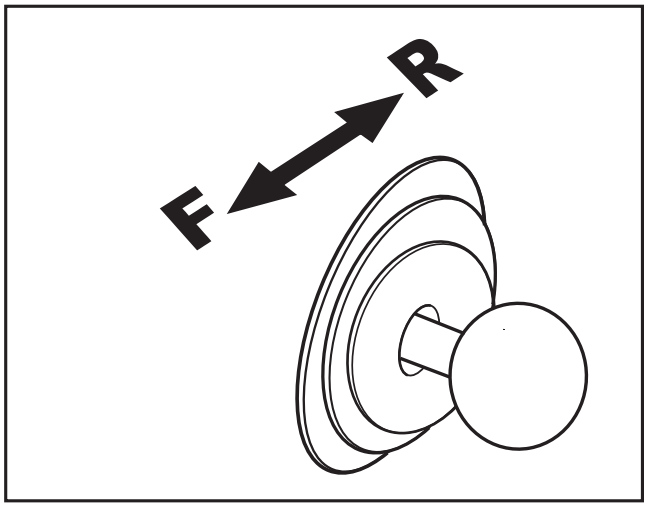

Fig 3-6. Gear shift travel and gear positions.

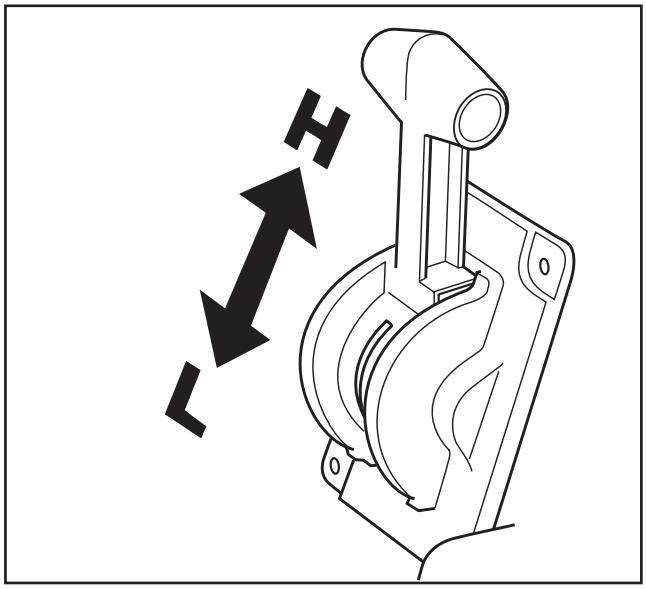

Fig 3-7. Hi/Low range positions.

⚠ CAUTION

Do not attempt to move the gearshift from the neutral (N) starting position until the engine idles down completely. The ARGO is equipped with an automatic clutch that is activated by engine speed. If the engine idle speed is too high, the transmission will grind during gear engagement.

3.10 HEADLIGHTS

The ARGO is equipped with 2 headlights that are operated through the dash mounted light switch. To turn the lights on, push the switch.

⚠ CAUTION

Do not leave the lights on for any length of time when the engine is not running. Leaving them on will drain the battery.

Always turn the ignition switch to the 'OFF' position when turning off the engine.

Avoid frequent starting of the engine and extensive idling. Both will lead to a drain of the battery because the electrical draw may be greater than the charging rate at engine idle.

SECTION 4
DRIVING PROCEDURES

4.1 DRIVING STRAIGHT AHEAD

The Moto-Cross style steering bar is spring loaded to return to a centered position. (See Figure 4-1). At this location, no braking is applied to either of the calipers. It is at this position that the steering bar should be when driving straight ahead. Turn the throttle twist grip slowly until the clutch system engages and the vehicle moves forward.

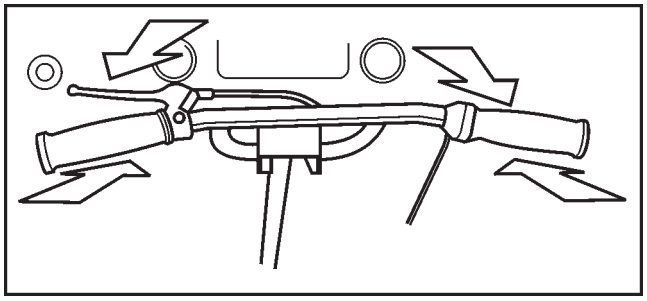

Figure 4-1. Position of moto-cross style steering bar in straight ahead operation.

4.2 STOPPING THE VEHICLE

Allow the throttle grip to return to the idle position. Squeeze the handle mounted brake lever with your left hand.

4.3 TURNING THE VEHICLE

The ARGO is a skid steer vehicle. The rear of the vehicle swings outward during a turn. Always take precautions when making turns to avoid hitting persons or objects. The proper way to make a wide turn is illustrated in Figure 4-2. Make a series of short turns. Centre the steering handle bar. Riding the brakes while making turns will result in excessive heat, brake fade and lead to premature brake wear.

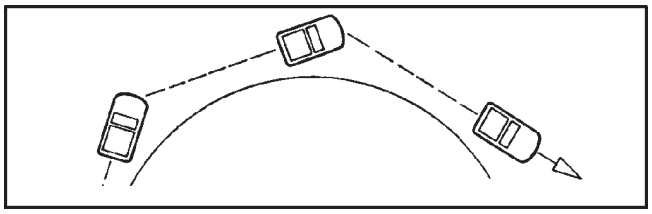

Figure 4-2. Correct method of making a wide turn

⚠ WARNING

Sharp turns, especially at high speeds or when heavily loaded, may cause the vehicle to roll over. Slow the vehicle down before making a turn. Do not apply the brakes too suddenly.

4.3.1 Left Turn

⚠ CAUTION

Do NOT oversteer. Avoid the tendency to push or pull harder on the steering system if the vehicle is not responding as expected. Once the vehicle's brake disc has been locked, pushing or pulling harder on the steering system will not increase the turning ability of the vehicle. Damage may occur to the steering system as a result of oversteering.

To make a left turn, pull back on the left steering bar while at the same time pushing on the right. When the turn has been completed, return the steering bar to the centre position.

4.3.2 Right Turn

To make a right turn, pull back on the right steering bar while at the same time pushing on the left. When the turn has been completed, return the steering bar to the centre position.

4.4 BACKING THE VEHICLE UP

With the engine at idle, shift the transmission into reverse. Ensure that the steering handle bar is centred. Turn the throttle twist grip slowly until the clutch engages and the vehicle moves backwards. Increase speed by gradually turning the accelerator twist grip. It is recommended that the Hi/Low shift be set in the Low position when operating in reverse.

4.4.1 Turning The Vehicle While Backing Up

Pull on the right bar and push on the left to turn right. Pull on the left bar and push on the right to turn left. When turning the vehicle while backing up, the rear of the vehicle swings in the direction of the turn. This is unusual for most people who are not familiar with skid steer vehicles. Carefully practice backing up and turning in an open area until you become accustomed to this procedure. Take precautions to avoid hitting persons or objects.

⚠ WARNING

Do not push against the firewall with your knees. Damage to the firewall and serious personal injury can result from the driven clutch wearing through the firewall.

SECTION 4
DRIVING PROCEDURES

4.5 ADMIRAL Operating Advantage

The XTI is equipped with the ADMIRAL steering transmission. The ADMIRAL is a triple differential transmission with unique steering characteristics not found in prior Argo models or traditional skid steer vehicles. The ADMIRAL features two distinct modes of operation, HIGH range for most driving and LOW range when tight turns are required. This transmission allows the ARGO to tackle a wider range of terrain and operating conditions.

When operating in HIGH range, a ***full lock right steering input*** will cause the right side wheels to turn forward at a lower rate (approximately 1/3 the speed) compared to the left side wheels and vice versa when ***full lock left steering input*** is applied. While this does not allow for zero radius turns, it does greatly increase efficiency, reduces engine, transmission & brake temperatures and reduces driver steering effort.

When operating in LOW range, a ***full lock right steering input*** will cause the right side wheels to turn backwards slightly. This will result in a tighter turn and should only be used for slow speed operation when tight turning is required.

NOTE: Extended use of Low range at higher speeds may result in increased engine, transmission and brake temperatures. This mode of operation should be avoided unless the terrain or obstacles warrants its use.

4.5.1 Selecting Forward, Neutral, Reverse, High or Low

The ADMIRAL transmission uses dog clutches to engage internal gears. The dog clutch is not synchronized to allow for shifting-on-the-fly. To avoid personal injury, transmission, vehicle or property damage, always bring the vehicle to a complete stop, allow the engine to return to idle, compress and hold the hydraulic hand brake, then select the appropriate gear function. Once selected, release the hydraulic hand brake and accelerate to desired speed.

NOTE: When selecting from HI to LOW or LOW to HI, the dog clutch may not automatically engage its mating gear. This is normal and expected. The HI and LOW selector is spring-loaded and will lock into place once engine RPM rises and clutches begin to engage. A slight, but normal, "clunk" noise may be heard during this procedure.

4.5.2 Recommended Gear Selections

Trails and higher speed driving: Recommended gear selection HIGH range: In High range, the XTI will turn as tight as most ATV's and UTV's, which is ideal for trail riding. Compared to previous braked skid steer vehicles, the XTI will corner with minimal loss of speed or engine power. The increased efficiency results in cooler running temperatures for the engine, transmission and steering system.

Towing: Recommended gear selection HIGH range: With increased efficiency and positive all-wheel drive in high range, the operator is able to maintain momentum, traction and control while under load. Engine power and smooth steering is maintained, point-turn operation is eliminated, allowing for smooth operation and towing. The elimination of point-turn while in high range reduces the likelihood of a "jackknife" situation.

Climbing hills: Recommended gear selection HIGH range: Similar to a towing situation, climbing hills successfully means maintaining traction and momentum. It is usually unwise (and unsafe) to perform sharp turns while climbing hills, so Low range, if required, should be used with caution in these situations.

Mud and Snow (including track use): Recommended gear selection HIGH or LOW range: Low traction situations are usually handled best in high range due to the fact that any turning inputs will "lock the differential" and force all 8 wheels to drive. If tightly spaced obstacles are present, low range will provide added maneuverability, albeit at a cost in both traction and efficiency.

Water / Amphibious use: Recommended gear selection HIGH or LOW range: While operating the vehicle in deep water, either range selection may be appropriate. In High range, the operator may notice a lack of maneuverability, especially at full throttle. In Low range, the inside, or steered, tires can counter rotate thereby providing greater maneuverability and control when turning the vehicle. There is a slight reduction of top speed when selecting Low range for water / amphibious use.

Low speed (with obstacles): Recommended gear selection Low range: While traversing a rock field or a wooded area, increased maneuverability available in Low range is a valuable asset. Switching back to High is highly recommended when the terrain clears and tight / sharp turning is not required.

SECTION 5
DRIVING PROCEDURES IN UNUSUAL CONDITIONS

5.1 REMOTE AREA USE

When traveling in remote areas or when traveling long distances, the following items are essential:

- a first aid kit
- a complete survival kit
- protective clothing and footwear
- waterproof safety matches
- candles
- emergency flares
- communications equipment
- adequate fuel supply in approved, watertight containers
- fire extinguisher
- back-up battery
- basic mechanic's tools and Argo spare parts

Before venturing into remote areas, carry out all inspections, adjustments and lubrication checks detailed in this manual. Do not proceed unless your vehicle is in good working condition.

Inform someone of your departure and return plans and your route so that help can be dispatched if you do not return as scheduled. Do not travel into a remote area alone.

Choose your equipment and supplies to meet the climate and terrain conditions that you may encounter.

Practice safe driving habits when traveling in remote areas. Avoid terrain that may be impassable.

5.2 ANGLE OF OPERATION

When operating any Argo vehicle on an angle, (up and down hills or across uneven terrain that causes the vehicle to tilt in any direction) the engine oil level and fuel delivery to the engine is affected.

If the engine oil level falls below the oil pump intake, damage can occur because of inadequate lubrication. To avoid engine damage and costly repairs:

- Do not operate your engine continuously on angles or inclines that are greater than 30 degrees in any direction.
- Make sure the engine oil level is near the "full" mark (However, do not overfill.)

5.3 UPHILL OPERATION

⚠ WARNING

Never accelerate or brake suddenly while driving up or down a hill. Sudden acceleration or braking can cause the vehicle to roll over, causing serious personal injury or death.

Never attempt to turn the vehicle around on a steep hill or grade. Turning the vehicle around on a hill can result in the vehicle rolling over.

Approach the hill head on to minimize the possibility of sliding sideways or rolling over. Accelerate slowly to prevent loss of traction. When traction is lost, the vehicle may slide sideways or backwards. If this occurs, apply the brakes gently and evenly to stop the slide. Allow the vehicle to coast to the bottom of the hill by carefully releasing the brakes.

Try to avoid steep hills. When a steep hill can't be avoided, be prepared to shift occupant weight forward, or have them get out of the vehicle to prevent the vehicle from rolling over. As a general rule, driving up a steep hill greatly increases the possibility of rolling over.

5.4 DOWNHILL OPERATION

Always approach the hill head on to minimize the possibility of sliding sideways, or rolling over. Gently apply the brakes to control downward vehicle speed. Do not abruptly or forcefully apply the brakes while traveling downhill. Sudden braking can cause the vehicle to roll over frontwards.

An alternative to applying the brakes while going down a gentle decline is to use engine braking. Select low range and keep the engine speed up just enough to keep the clutch engaged.

Avoid steep declines when possible. When a steep decline cannot be avoided, shift occupant weight to the rear of the vehicle to prevent the vehicle from rolling over. As a general rule, driving the vehicle down a steep decline greatly increases the possibility of rolling over.

5.5 SIDE SLOPE OPERATION

Do not drive your vehicle across the side of a hill. Side slope operation greatly increases the risk of rolling the vehicle over sideways.

Prolonged side slope operation may cause engine damage. Observe the engine angle of operation limitations in Section 5.2.

SECTION 5
DRIVING PROCEDURES IN UNUSUAL CONDITIONS

Operation on side slopes will require frequent use of the brakes for steering correction since the vehicle tends to head downhill. This may cause brake overheating or fade.

5.6 AMPHIBIOUS OPERATION - GENERAL

⚠ WARNING

ARGO vehicles may sink if they fill with water. If water starts entering the vehicle, head to the nearest shore immediately. Be prepared to abandon the vehicle if it appears that the vehicle will fill with water before you reach the shore. Be especially cautious when operating a loaded vehicle (cargo and/or passengers) in water. Observe the capacity limits.

It is not recommended to drive in remote areas alone or without first planning your route and informing people of your location.

Use caution and good judgement when entering water. Drowning can occur even in shallow water. Watch for obstacles under the water that could destabilize or upset the vehicle and may cause occupants to be ejected from the vehicle. Make sure all persons in the vehicle are wearing approved life jackets or Personal Flotation Devices.

All ARGO vehicles are self-propelled, amphibious vehicles, capable of navigating calm water, provided the following precautions are observed:

1. Do not enter water if the vehicle is overloaded. Refer to Section 1.4 of this manual for recommended load capacity in water.

2. Do not use seat belts or any restraining device while the ARGO is floating in water. In shallow water, be prepared to free yourself from restraining devices quickly. If an emergency arises, you and your passengers may have to leave the vehicle quickly.

3. Do not attempt to cross large bodies of water. Stay close to the shore in case an emergency arises and you have to leave the water.

4. Do not attempt to navigate any body of water with a strong current. Avoid water operation under windy conditions.

5. Do not use the Argo in water when equipped with tracks unless it is also equipped with an outboard motor. The tracks do not propel the Argo in water.

6. Use extra caution when operating the ARGO in cold water. If the vehicle upsets or swamps, exposure in cold water significantly reduces the chance of survival.

7. Be prepared to adjust the position of cargo and passengers so the vehicle floats level.

8. Care must be taken when encountering submerged obstacles that may upset the vehicle.

Observe the following safety precautions BEFORE entering the water:

1. All occupants must wear an approved personal flotation device (PFD) or life jacket while traveling in water.

2. Equip the vehicle with a paddle and bailing can for water operation. An optional bilge pump kit (ARGO Part No. 638-40) is available from your ARGO dealer and is recommended in addition to the onboard bailing can.

Drain Plugs

1. Drain Plugs are accessible from the outside of the vehicle. Make sure both drain plugs in the rear of the lower body (Figure 5-1) are in place and properly tightened. To install, locate the drain plugs at the rear of the vehicle and thread each drain plug in a clockwise direction into the plug fitting ensuring a snug fit. Check the O-ring on drain plug periodically. When removed, each drain plug remains attached to the hole opening to prevent loss or misplacement of the plug while the vehicle is draining. (Figure 5-2).

Figure 5-1. Location of rear drain plugs.

Figure 5-2. Removing and Installing the drain plug.

2. Visually check the lower body of the vehicle for cuts, punctures or holes that will allow water to enter the vehicle.

3. Make sure that any cargo in the rear of the vehicle is evenly distributed.

4. Periodically inspect the fit of the axle housings to the lower body to ensure they are water tight. If there are signs of water leaking into the lower body, take corrective action before crossing shallow water again.

NOTE

Always observe the recognized rules of boating while traveling in water.

5.6.1 Entering the Water

The point of entry should be free of rocks, stumps and other obstacles. Enter the water from a firm, gradual slope whenever possible. With the wheels partially submerged but still in contact with the bottom, stop and check thoroughly for water entering the lower body.

If a leak is detected, drive back onto shore. Drain the vehicle and repair the leak before re-entering the water.

If the body of water must be entered from a steep slope or uneven terrain, back the vehicle into the water. With the engine and transmission weight concentrated in the front of the vehicle, the rear is lighter and floats higher.

Be careful not to submerge the bumper as you enter the water. With the bumper submerged, water can enter through the openings in the upper body. If long water operation / use is expected, Argo recommends installing the dual bilge pumps to evacuate any water that may collect in the lower body.

5.6.2 Driving Procedures in Water

After the vehicle is floating evenly on the water, turn the throttle twist grip to increase speed. ***(Note: If the vehicle is equipped with a ROPS, unlatch all seatbelts.)*** Use only part throttle when traveling through water. Full throttle only results in excessive turbulence, not higher speeds.

The vehicle is steered by a combination of pulling on the right bar and pushing on the left to steer right or vise-versa to travel left. The turning radius is somewhat greater in water, and the vehicle does not respond to changes in direction as quickly as it does on land. Turning in water may be more effective in Low gear.

The vehicle is propelled forward through the water by the web of the tires as they rotate. To back up in water, release the throttle, shift the transmission into neutral, and use a paddle.

Avoid rocks, stumps or other obstacles that are below the surface of the water. Striking these obstacles may damage the bottom or upset the vehicle.

If your vehicle begins to fill with water, immediately head to the nearest shore. Get the vehicle out of the water and drain it by removing both rear drain plugs. Correct the leak before entering the water again.

⚠ CAUTION

Do not leave the vehicle in water for extended periods of time. Water could enter the axle seals or lower body and cause damage to the axle bearings, chains or sprockets.

5.6.3 Driving Out of Water

When driving out of water, choose an area of the shore that is reasonably flat and free of rocks, stumps and other obstacles. Steer the vehicle so that both front wheels reach the shore at the same time. Accelerate slowly until the vehicle is out of the water. If vehicle is equipped with a ROPS system, re-fasten seatbelts.

5.7 WINTER OPERATION

Follow these precautions when operating the ARGO in winter conditions:

- Equip the vehicle for remote area use, as listed in Section 5.1.
- Keep the battery fully charged and in good condition.
- Use the recommended winter grade of engine oil.
- Do not allow water or snow to accumulate in the vehicle. Snow may melt during operation of the vehicle, collect in the lower body and freeze around the chains and final drive components, immobilizing the vehicle.
- Store the vehicle indoors or under cover.
- Equip your vehicle with snow tracks for travel over deep snow.
- **Steep, snow-covered or icy hills may be more difficult to ascend. Ice cleat kits (Argo Part No. 825-21) are available for Rubber Track systems.**
- Never travel alone into a remote area. Leave your route and arrival plans with someone who can send help if you fail to arrive as planned.

SECTION 5
DRIVING PROCEDURES IN UNUSUAL CONDITIONS

5.7.1 Use on Ice Covered Bodies of Water

⚠ WARNING

Using the ARGO on ice-covered bodies of water is potentially hazardous. Use extreme caution. Exposure to cold water reduces a person's chance of survival. Protective clothing, such as a marine survival suit will significantly decrease the effect of exposure in frigid water.

Before venturing out onto ice-covered bodies of water, it is extremely important to:

- Check the ice thickness and condition to be sure it will support the vehicle.
- Take all precautions as in Section 5.6, particularly paragraph 3 referring to drain plugs.
- Take along a cellular telephone or similar device to call for help in case of emergency.

If the vehicle breaks through the ice, it will float in the water, provided that there are no leaks in the body, the drain plugs are in place and vehicle is not taking on water through any body openings. However, there is a risk of the vehicle tipping, particularly if the load is unbalanced. Be prepared to shift occupants' weight for balance.

Getting back onto safe ice depends on various conditions and the expertise of the driver. Be especially careful to prevent water from entering the vehicle.

- Balance the cargo and passenger load.
- Keep openings, like air intakes/exhaust, etc. above the water line.
- Keep the bilge pump running.
- Winch the vehicle out.
- Back onto ice, as the back end is lighter and floats higher in the water.
- Avoid getting the wheels on only one side onto the ice surface as water could enter over the opposite side of the vehicle.
- Avoid turning as the Argo is climbing out to avoid vehicle tip-over.
- Break the thin ice around the vehicle with the paddle until there is firm ice for the vehicle to climb onto.
- Be wary of currents which may pull the vehicle under the ice.

If you feel that you may not be able to get the vehicle back onto safe ice or land, you might consider staying put to await rescue. This may be safer than trying to leave the vehicle to walk over thin ice.

SECTION 6
OIL, FILTER AND LUBRICATION INFORMATION

6.1 ENGINE OIL INFORMATION

⚠ WARNING

Detailed information on standard workshop and safety procedures and general installation practices is not included here. ODG assumes no responsibility or liability for PERSONAL INJURY or VEHICLE DAMAGE which results from any procedure performed, including those procedures outlined here. Before performing any procedure, an individual must have determined to his/her satisfaction that personal injury or vehicle damage will not result from the procedure, working environment or tools selected.

6.1.1 Checking the Engine Oil Level

Check the engine oil level each day before operating the engine.

To check the oil during an operating period, shut the engine off, let it cool down and allow the oil time to drain into the sump before checking the oil level. Position the vehicle so the engine is level.

The Kohler engine (Figure 6-1) is equipped with a dipstick and a separate oil filler tube. To check the oil level, clean the area around the dipstick before removing. Remove the dipstick and wipe it with a clean cloth. Re-insert the dipstick and push it all the way into the tube. Remove the dipstick and check the oil level. The oil level should be between the ADD and FULL marks. If the level has dropped, add oil to bring the level up to the FULL mark. **DO NOT OVERFILL.**

⚠ CAUTION

Do not run the engine if the oil level is above the FULL mark or below the ADD mark. Premature engine damage or total engine failure can occur when the oil level is not properly maintained.

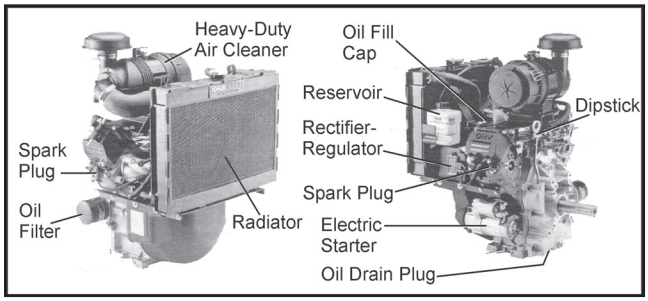

Figure 6-1. Oil fill and level location Kohler Aegis engine.

6.1.2 Recommended Engine Oil

Use a high quality detergent oil of API (American Petroleum Institute) service class as listed in chart. Choose the correct viscosity of oil for seasonal driving conditions. Using the proper type and weight of oil in the crankcase is extremely important. So is checking oil daily and changing oil regularly. Failure to use the correct oil, or using dirty oil, causes premature engine wear and failure.

Viscosity Table - Kohler Aegis Engine

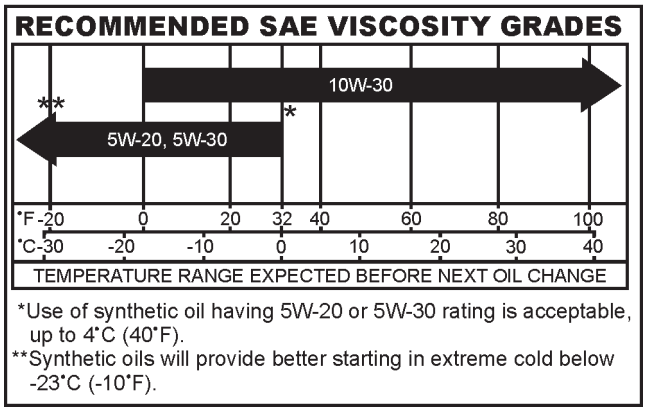

6.1.3 Changing Engine Oil

During the initial engine break-in period, change the oil after the first 20 hours of operation for the Kohler Aegis engine. After the break-in period, change the engine oil every 150 operating hours, or more frequently if the vehicle is operated in dusty or dirty conditions.

Draining the Engine Oil

Each engine is equipped with a drain plug for draining the oil. The drain plug location is shown in Figure 6-1. Drain the oil from the engine as follows:

1. Start and warm up the engine so the oil will drain easily.
2. Level the vehicle so the oil will drain completely.
3. Place a suitable container under oil drain of engine and remove drain plug with a 5/16" Allen socket wrench.

NOTE

As an alternative to draining the engine oil from the drain plug you can use a vacuum pump and remove the oil through the dipstick tube. A pump suitable for this is available through your Argo dealer, Part No. 638-02.

SECTION 6
OIL, FILTER AND LUBRICATION INFORMATION

PLEASE DISPOSE OF WASTE OIL PROPERLY TO CONSERVE OUR ENVIRONMENT.

4. When all the oil has been drained from the engine, clean and replace the drain plug. MAKE SURE it is properly tightened before refilling the engine.

Refilling the Engine

Refill the engine through the oil fill port with 2.0 qts. (1.9 L) of oil. Make sure the appropriate grade of oil is used (Section 6.1.2). As you add oil, frequently check the level with the dipstick. Do not overfill. Start engine. Check for leaks. Stop the engine. Check the oil level. Add oil only to the "Full" mark on the dipstick.

6.2 TRANSMISSION OIL INFORMATION

6.2.1 Checking the Transmission Oil Level

Check the transmission oil level daily or before each use.

The transmission in the XTI does not have an oil dipstick. Check for correct oil level by viewing the site glass installed to the lower portion of the transmission housing (Figure 6-2). To view this site glass, remove the quick release firewall. Oil filling half the site glass indicates correct oil level.

Add 80 W 90 Gear Lube HYPOY-C through the transmission oil fill vent hole until the transmission is filled to the correct level. DO NOT OVERFILL.

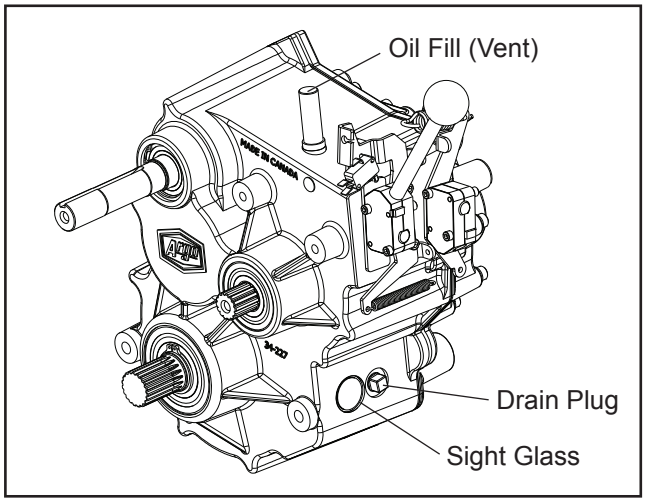

Figure 6-2. HDi transmission.

6.2.2 Changing the Transmission Oil

Change the transmission oil after the first 20 hours of operation. After this, change the transmission oil every 150 operating hours. Start and warm up the engine so the oil will drain easily.
Remove firewall to access the drain plug located at the bottom of the transmission. Drain the transmission oil into a suitable container and dispose of the oil at a disposal site.

While draining the transmission oil, be sure to clean off any metal particles that are on the magnet of the drain plug. These fine metal particles are a result of the transmission gears meshing during the initial break-in period. Re-install the plug and tighten it securely.

Removing the oil from the ADMIRAL transmission requires the use of a vacuum style pump such as the 638-02 Big Boy, Top Sider (available from Ontario Drive and Gear). Due to the design of the ADMIRAL transmission, the majority of the oil in the case will be below the drain plug.

Remove the drain plug (Figure 6-2) and drain the oil until the flow stops. Insert the vacuum tube of the Big Boy Vacu-Pump into the drain plug hole and remove the remaining oil from the transmission sump.

Refilling the Transmission

Install the drain plug. Remove the fill/vent plug located on the top of the transmission. Fill the transmission with 80W90 Gear Lube HYPO-C. Fill the transmission until the sight glass is half full. Oil capacity is 1.27 qts. (1.2 L).

6.3 FILTER INFORMATION

6.3.1 Air Filter

The Kohler Aegis engine is equipped with a heavy duty high density paper air cleaner element surrounding a canister style inner element. Cleaning is not recommended, each element should be replaced when dirty. See Figure 6-3.

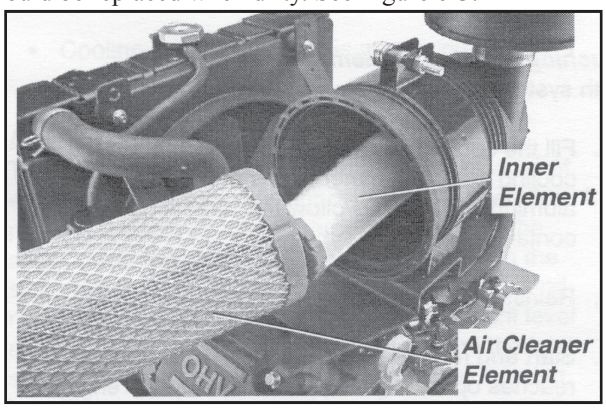

Figure 6-3. Air Cleaner Element and Inner Element.

SECTION 6
OIL, FILTER AND LUBRICATION INFORMATION

For instructions to remove, clean and replace the air filter components, refer to the air cleaner section of the engine Owner's Manual.

6.3.2 Fuel Filter

The XTI is equipped with an in-line fuel filter (Part No. 24 050 03). Figure 6-4.

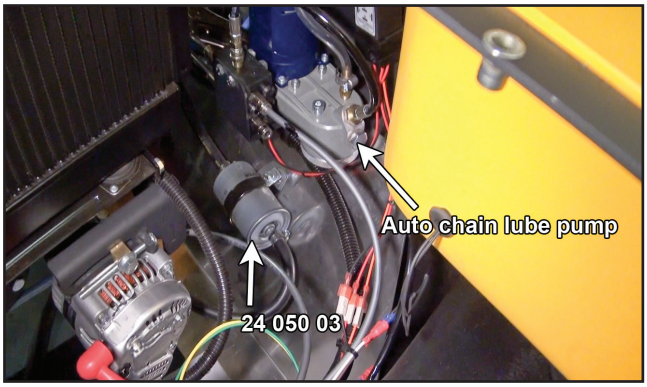

Figure 6-4. Fuel filter location.

Replace the Kohler high pressure fuel filter after every 300 hours of operation or once a year. To replace the filter, loosen the gear clamps with a standard screw driver and pull the rubber fuel lines off of the filter. Install the new filter with the flow arrow pointing toward the engine. Tighten the clamps securely. Start the engine and check for fuel leaks.

6.4 LUBRICATION INFORMATION

6.4.1 General

The following parts and components require regularly scheduled lubrication to prevent premature wear and replacement.

1. Spline Couplings
2. Drive Chains
3. Bearings

Use the recommended lubricants listed in this section and carefully observe the recommended lubrication intervals.

6.4.2 Clutch Lubrication

No lubrication is required for either the driven clutch or driver clutch. They are designed to run dry. If lubricant is used, use of the vehicle will attract dirt and cause damage to the clutch components. Contamination by dust and dirt can cause poor performance, premature wear or failure.

A complete service of the clutch units is required after every 150 hours of operation. To perform this procedure, the clutches must be disassembled. Special tools are required to disassemble the clutch units. We recommend that you return your vehicle to an authorized ARGO dealer to have the clutch units serviced.

6.4.3 Drive Chain Lubrication

Your ARGO vehicle is equipped with roller chains to each axle. If the optional automatic chain oiler system (see Section 6.4.4) is not installed, then lubricate the chains every 10 hours with Aerosol Chain Lube (ARGO Part No. 125-86), or more frequently in dirty or wet conditions.

After every 100 hours of operation, or for extended periods of storage, remove all the drive chains from the vehicle and clean them thoroughly in a suitable solvent, i.e. degreaser.

⚠ WARNING

Never use gasoline as a cleaning solvent. Gasoline is extremely flammable and can explode if ignited, causing serious personal injury.

Allow the chains to dry thoroughly, re-lubricate generously with ARGO Chain Lube and re-install.

Refer to Section 7.2.3 of this manual for drive chain removal and re-installation instructions.

6.4.4 Automatic Chain Oiler System (if equipped)

NOTE

Proper lubrication of the chain drive components greatly increases their service life. Keeping chains out of water and dirt will also improve the effectiveness of chain lubrication.

Operation:
The automatic chain oil system operates on a timed circuit that starts as soon as the key is turned to the run position. The system starts with a 15 minute off cycle followed by a 5 second on cycle when the pump runs and supplies oil to the oil drip tubes. The drip tubes, direct the drips to land between each inner and outer plate of the chain.

The override switch on the dash bypasses the timer and will run the pump for as long as the switch is pressed (switch does not interrupt the timer program). The switch is meant to be used to run the pump for initially priming the system, checking drip tube alignment, or manually re-lubricating the chains after cleaning them.

Recommended Oil:
Any good quality oil of the proper viscosity (based on temperature, see chart) can be used. The oil must be able to penetrate into the bushings and side plates to be effective. **Do not use** used oils, high tack oils (i.e. chainsaw bar oil), heavy oil, or grease.

SECTION 6
OIL, FILTER AND LUBRICATION INFORMATION

If the Argo needs to be used in environmentally sensitive areas, consider using a biodegradable oil of the proper viscosity as shown in the chart.

TEMPERATURE	-40 ~ 0 C (-40 ~ 32 deg. F)	0 ~ 40 C (32 ~ 104 deg. F)	40 ~ 50 C (104 ~ 122 deg. F)
OIL VISCOSITY	SAE 10	SAE 20	SAE 30

First time operation:

1. Fill the reservoir with appropriate oil.
2. Remove the front floor pan, firewall, and rear floor pan.
3. Turn the key to run position, press and hold the override switch. You will hear the pump.
4. With the pump running watch below the drip tubes to see when the oil begins to drip. It may take close to 2 minutes of continuously holding the switch before the system is primed. The oil will start dripping on the front chains several seconds before it drips on the rear.
5. Once the oil starts dripping watch the drips to make sure they are falling onto the side plates of the chain.
6. Loosen the bolt holding the drip tube and adjust the position as required.

System may require priming if reservoir is run dry or after extended periods of non use.

Maintenance:

- Check the level in the reservoir prior to daily operation.
- For optimum pump and chain life, do not let the reservoir run dry.
- Periodically check to make sure all holes are dripping oil correctly.
- Wiping the bottom of the drip tubes with a rag will remove any larger deposits of dirt.
- A full reservoir of oil should last approx 40 hrs of run time.

6.4.5 Axle Bearing Lubrication

The XTI axle assemblies are filled with 200ml of 80W90 Gear Lube HYP0Y-C. At 20 hours:

1. The oil level should be checked by removing the side plug on each axle housing. Fill the axle assembly until the oil is level with this hole.

2. The bottom plug should be removed to check for water contamination. If water runs out or the oil has a milky appearance, drain the oil and replace with 200 mL (6.7 ozs.) of 80W90 Gear Lube HYP0Y-C.

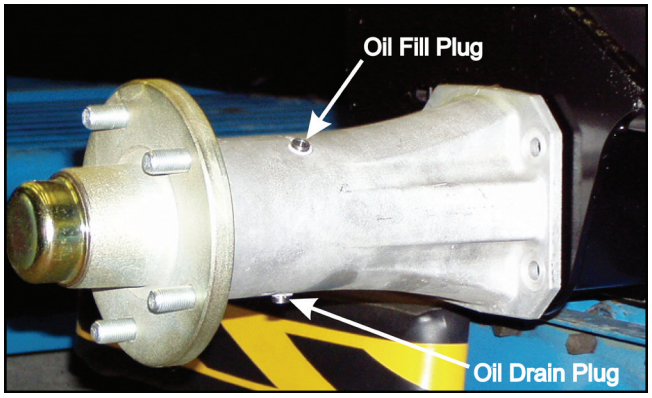

Figure 6-5. Axle Assemblies

The oil in the axle housings should be replaced each 150 hours of operation. Check bolts for tightness.

6.4.6 Output Shaft Lubrication

Output shaft spline couplers are equipped with a grease fitting (Figure 6-6) to allow lubrication to the spline of the shaft and coupling connector. Lubricate every 25 hours with a lithium based, NLGI #2 or 3 mineral oil based grease, (such as Shell Alvania #3). Wipe off excess.

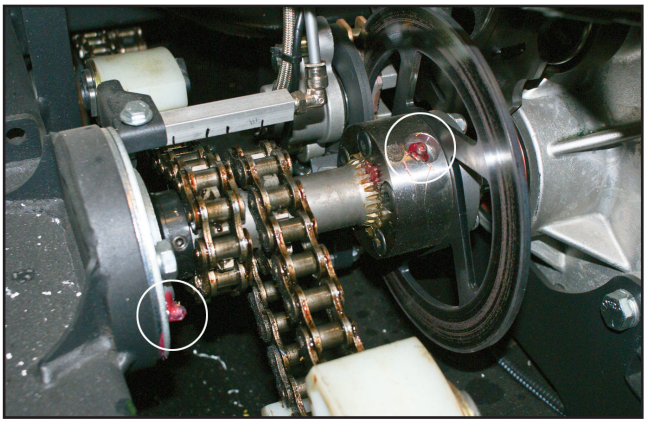

Figure 6-6. Output shaft grease fitting.

⚠ CAUTION

Do NOT apply excessive amounts of grease as this could contaminate brake discs when vehicle is in operation and output shafts are turning at a high rate of speed.

SECTION 7
MAINTENANCE INFORMATION

7.1 ELECTRICAL SYSTEM

⚠WARNING

Detailed information on standard workshop and safety procedures and general installation practices is not included here. ODG assumes no responsibility or liability for PERSONAL INJURY or VEHICLE DAMAGE which results from any procedure performed, including those procedures outlined here. Before performing any procedure, an individual must have determined to his/her satisfaction that personal injury or vehicle damage will not result from the procedure, working environment or tools selected.

7.1.1 General

To prevent damage to the electrical system:

- Never weld on the vehicle. If welding is required, take your vehicle to an authorized Argo dealer.
- Connect battery booster cables properly, positive to positive and negative to negative. Connect negative cable last, disconnect first. **It is not a recommended practice to boost your Argo if the battery is dead. If possible, avoid the use of booster cables from an external battery source. Damage can occur to the engine ignition system.**
- Connect switch terminals properly, especially the ground wire.

7.1.2 Battery - Deka Battery, ARGO Part No. 126-108

The Argo XTI standard specification includes a maintenance free absorbed glass mat (AGM) battery, although customers may choose to supply their own battery.

The battery is located beneath the drivers bench seat, along side the fuel tank, to the right side of the driver.

The AGM battery is a sealed battery. Never attempt to pry open an AGM battery. If AGM battery failure is suspected, please take your vehicle to an authorized Argo dealer for service.

SAFETY PRECAUTIONS

California Proposition 65 Warning: Batteries, battery posts, terminals and related accessories contain lead and lead compounds, and other chemicals known to the state of California to cause cancer, birth defects and reproductive harm. **Wash hands after handling!**

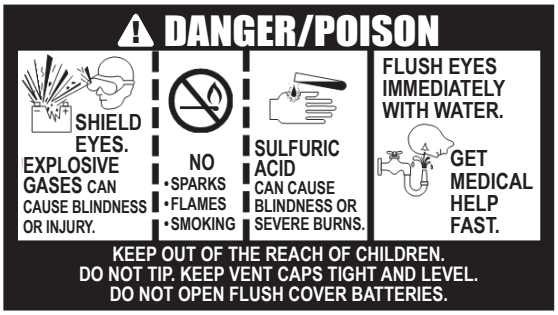

⚠WARNING

Follow all safety instructions when handling batteries! Always wear safety glasses and a face shield when working on or near batteries.

All batteries generate explosive hydrogen gas. Keep sparks, flames and cigarettes away from batteries at all times. Do not connect or disconnect "live" circuits. To avoid creating sparks, always turn charging and testing equipment off before attaching or removing clamps.

ALWAYS DISCONNECT GROUNDED CABLE FIRST AND CONNECT IT LAST TO PREVENT DANGEROUS SPARKS.

Perform all work in a well ventilated area. Never lean directly over a battery while boosting, testing or charging it. ***PROTECT YOUR EYES!***

Batteries contain corrosive sulfuric acid that can destroy clothing and burn the skin. Neutralize acid spills with a paste made of baking soda and water or battery cleaner spray. ***BE CAREFUL!***

Checking the Fluid Level (If equipped with a wet-cell lead acid battery)

Check the fluid level every 50 hours of operation. Remove the pod vents and make sure each cell is filled to the fluid level as shown in Figure 7-1. If the fluid has dropped below the fill well, add distilled water until the cell is filled to correct level. **DO NOT OVERFILL.**

SECTION 7
MAINTENANCE INFORMATION

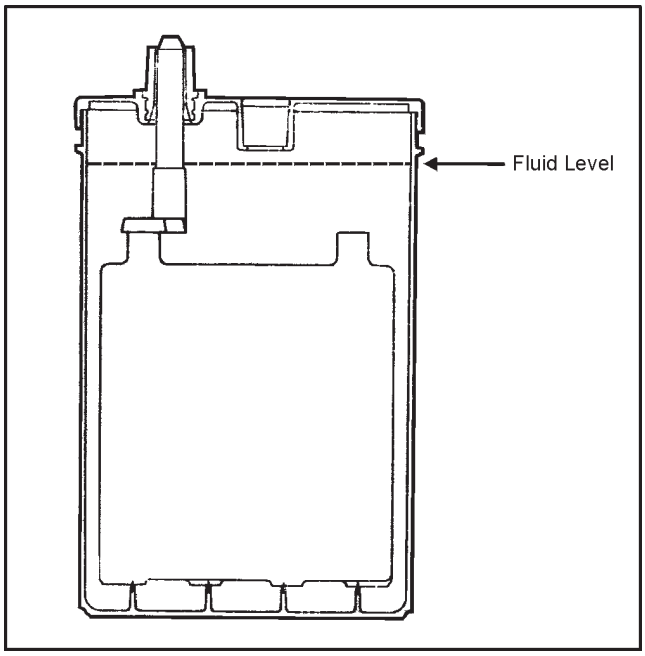

Figure 7-1. Battery fluid level

In-Vehicle Service and Testing

Follow safety precautions:

WEAR PROPER EYE PROTECTION!

Prior to any testing, visually inspect the battery. Look for:

- Cracked or broken case or cover
- Loose cable connections
- Leaking case-to-cover seal
- Corrosion
- Damaged or leaking terminals

Neutralize any corrosion with a baking soda/water paste or battery cleaner spray. Scrape or brush off the residue and wash the area with clean water. Following your visual inspection, check the battery's state of charge with a voltmeter.

You must boost charge a weak battery before load testing. (See charging chart under "Charging Tips" section.) If fully charged, perform a load test. **PROTECT YOUR EYES!**

Safe Installation

Follow safety precautions:

WEAR PROPER EYE PROTECTION!

1. Before removing old battery, mark the positive (+) and negative (–) cables for proper connection to the new battery.
2. Always disconnect the ground cable first [usually negative (–)] to avoid any sparking around battery. Then disconnect the positive (+) cable and carefully remove the old battery.
3. Clean and inspect. Cable ends must be clean and corrosion free. Cable must not be frayed or bare.
4. Install new battery in same position as old one and tighten hold-down.
5. Connect positive (+) cable first. Connect ground cable last. If side terminal connection, use a special side terminal torque tool to tighten side terminal cables to avoid damage. Never overtighten or hammer cables onto terminals.

Check the Charging System

The voltage regulator should be checked every time you change oil. It should be checked immediately if the battery is hot to the touch, if electrolyte is bubbling or spewing from the vents, or if the open circuit voltage is below 12.4 volts or above 12.9 volts.

Charging Tips

Follow safety precautions:

WEAR PROPER EYE PROTECTION!

- To avoid a battery explosion, never attempt to charge a frozen battery. Allow it to warm up to room temperature before placing on charge.
- **Warning:** Gel and AGM (Absorbed Glass Mat) batteries require a voltage-limited charger. Charging a Gel or AGM battery on a typical shop charger – even one time – may greatly shorten its life.
- **Important:** Never overcharge batteries. Excessive charging will shorten battery life.
- Prior to charging, read the manufacturer's instructions for proper charger hook-up and use.
- Turn charger off prior to hook-up to avoid dangerous sparks. **PROTECT YOUR EYES!**
- The maximum charge rate in amperes should be no more than 1/3 of the battery's reserve capacity minute rating. If the terminal voltage exceeds 16.0 volts while charging, reduce the charge rate.
- Continue charging and reduce the rate as needed until a two-hour period results in no increase in voltage or decrease in current.
- If violent gassing or spewing of electrolyte occurs, or the battery case feels hot to the touch, temporarily reduce or halt charging.

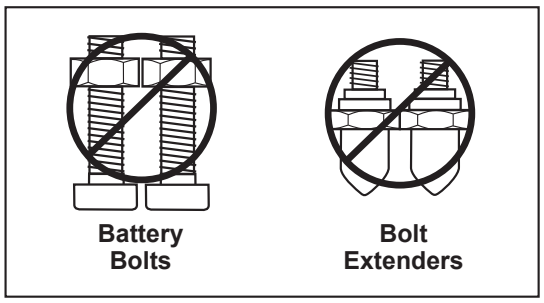

Figure 7-1a. Battery Bolts.

SECTION 7
MAINTENANCE INFORMATION

DO NOT USE Battery Bolt Extenders or Battery Bolts (Figure 7-1a) for testing or charging batteries. They do not provide the necessary lead-to-lead contact, and can reduce your cold cranking amperage (CCA) and state of charge readings. Batteries should be boost charged if the open circuit voltage (voltmeter) reading is below 12.4 volts. See charging chart Figure 7-1b.

VOLTAGE	STATE OF CHARGE	APPROX. BATTERY CHARGING TIME * TO FULL CHARGE AT 80°F/27°C			
		Maximum Rate at			
		50 Amps	30 Amps	20 Amps	10 Amps
12.6	100%	–FULL CHARGE–			
12.4	75%	20 min.	35 min.	48 min.	90 min.
12.2	50%	45 min.	75 min.	95 min.	180 min.
12.0	25%	65 min.	115 min.	145 min.	280 min.
11.8	0%	85 min.	150 min.	195 min.	370 min.

** Charging time depends upon battery capacity, condition, age, temperature and efficiency of charger.*

Figure 7-1b. Charging Chart.

Battery Storage Tips

Batteries should be stored in a cool, dry area in an upright position. Never stack batteries directly on top of each other unless they're in cartons. Do not stack more than 3 high (2 high if battery type is heavy commercial).

Always test and charge if necessary before installation.

(See "Charging Tips" sections.)

Jump Starting

Shield eyes and face at all times…Never lean directly over battery when testing, jump starting or performing other maintenance.
Be sure vent caps are tight and level. Place a damp rag over the vent caps of both batteries. Be sure vehicles do not touch each other.

1. Connect one end of positive (+) booster cable to positive (+) terminal of discharged battery, wired to starter or solenoid.
2. Connect other end of positive (+) booster cable to positive (+) terminal of assisting battery.
3. Connect one end of negative (–) booster cable to negative (–) terminal of assisting battery, wired to ground.
4. Complete hook-up by connecting other end of negative (–) booster cable to engine block of stalled vehicle — as far away from battery as possible...AWAY FROM MOVING FAN AND GAS LINES.
5. Start both vehicles and remove cables in reverse order of connection. Discard the rags. See Figure 7-1c for proper hookup.

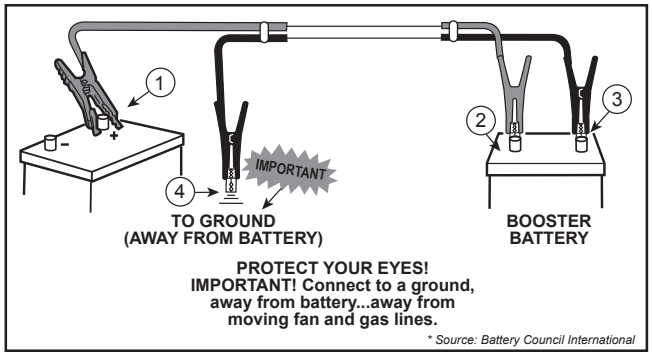

Figure 7-1c Jump Starting.

Cleaning the Battery Terminals and Cable Connections

Clean the battery terminals and cable connections every 150 hours. Remove the black NEGATIVE (-) cables first. Make sure you reconnect the NEGATIVE (-) cables to the NEGATIVE (-) post and the red POSITIVE (+) cables to the POSITIVE (+) posts. Damage to the electrical system will occur if the cables are reversed.

Cleaning the Battery

Clean the top of the battery every 300 hours with a mixture of baking soda and water. Before cleaning the battery, remove it from the vehicle and make sure the pod vents are in place (non-sealed batteries only). Soak a cloth in the soda/water mixture and scrub the top of the battery. After the foaming has stopped, flush with clean water and dry with a clean cloth.

7.1.3 ELECTRICAL SYSTEM FUSES

All models of the ARGO are equipped with push-in type automotive fuses. The fuses protect the electrical circuits of the vehicle. They are located in the fuse block, inside the engine compartment. Replace any blown fuses. Return your vehicle to an ARGO dealer for inspection of the electrical circuit if a fuse blows repeatedly.

7.1.4 SPARK PLUGS

Remove and inspect the spark plugs after every 150 hours of operation. Clean the plugs and reset the gap as detailed in the engine owner's manual.

Replace the spark plugs if the electrodes are corroded or damaged or if the insulator is cracked. Use the correct plug for the engine as detailed in the engine owner's manual.

Re-install the spark plugs carefully, taking care to start the threads properly. Torque the plugs to 10 - 15 ft. lbs (14 to 20 N·m). Do not over tighten.